NLT Technologies, Ltd.

TFT COLOR LCD MODULE

For BEIJING D-VIEW TECHNOLOGY Co.,Ltd.

NL160120AC27-37

54cm (21.3Type)
UXGA
LVDS Interface (2 port)

PRELIMINARY SPECIFICATIONS

DOD-PP-1603 (1st edition)

Signature of writer

Approved by K. Fujimoto	*Date*
K. FUJIMOTO	Mar. 15, 2013
Checked by	*Date*
Prepared by E. Yoshimura	*Date*
E. YOSHIMURA	Mar. 15, 2013

Published by

Product Planning Department
Sales Division
NLT Technologies, Ltd.

INTRODUCTION

• WARRANTY

NLT Technologies, Ltd. (hereinafter called "NLT") warrants that this product meets the product specifications set forth in this document. If this product under normal operation is found to be non-conforming to the product specifications, and such non-conformance is promptly notified to NLT within one (1) year after the delivery date, and further such non-conformance is solely attributable to NLT, NLT shall repair the non-conforming product or replace it with a conforming one, free of charge. However, this warranty does not apply to any non-conformance resulting from any one of the following:

1) Unauthorized or improper repair, maintenance or modification
2) Operation or use against specifications, instructions or warnings given by NLT
3) Any other causes attributable to customer

In case NLT repairs or replaces a product after the one (1) year warranty period, NLT shall be entitled to charge for such repair or replacement. Those replaced parts shall be covered with six (6)-month warranty period from the replacement day. Non-conforming products may be replaced with substitutes instead of repair when the manufacture of this product has been terminated.

EXCEPT AS EXPRESSLY SET FORTH HEREIN, NLT DISCLAIMS ANY WARRANTIES, EXPRESS OR IMPLIED, INCLUDING BUT NOT LIMITED TO MERCHANTABILITY AND FITNESS FOR A PARTICULAR PURPOSE, AND DISCLAIMS ANY REMEDIES.

• MAINTENANCE

The specifications of maintenance parts are subject to change with equivalent or better quality. NLT will not accept maintenance for only mounting parts on circuit board (e.g. connector, fuse, capacitor, resistor, etc.) or only parts for backlight (e.g. reflector sheet, light guide plate, etc.). but for a whole module by unit.

If NLT plans to discontinue this product, NLT shall inform it to customers in six (6)-month advance from the issued date of official announcement. In addition, after the product discontinuation, NLT may replace a product with a whole product not repairing parts.

• CHANGE CONTROL

For the purpose of product improvement, this product design is subject to change for improvement in specifications, appearance, parts, circuits and so on. In case that the design change affects the product specifications, NLT shall inform it to customers in advance.

• HANDLING OF DOUBTFUL POINTS

Any question arising out of, or in connection with, this SPECIFICATION or any matter not stipulated herein will be settled each time upon consultation between both parties.

CONTENTS

INTRODUCTION 2

1. OUTLINE 5
1.1 STRUCTURE AND PRINCIPLE 5
1.2 APPLICATION 5
1.3 FEATURES 5
2. GENERAL SPECIFICATIONS 6
3. BLOCK DIAGRAM 7
4. DETAILED SPECIFICATIONS 8
4.1 MECHANICAL SPECIFICATIONS 8
4.2 ABSOLUTE MAXIMUM RATINGS 8
4.3 ELECTRICAL CHARACTERISTICS 9
4.3.1 LCD panel signal processing board 9
4.3.2 LED Driver board 10
4.3.3 LED Driver board current wave 10
4.3.4 Power supply voltage ripple 11
4.3.5 Fuse 11
4.4 POWER SUPPLY VOLTAGE SEQUENCE 12
4.4.1 LCD panel signal processing board 12
4.4.2 LED driver board 12
4.5 CONNECTIONS AND FUNCTIONS FOR INTERFACE PINS 13
4.5.1 LCD panel signal processing board 13
4.5.2 LED driver board 14
4.5.3 Positions of socket 14
4.6 LUMINANCE CONTROL 15
4.6.1 Luminance control methods 15
4.6.2 Detail of BRTP timing 16
4.7 LVDS data input map. 17
4.7.1 Mode A 17
4.7.2 Mode B 18
4.7.3 Mode C 19
4.8 DISPLAY COLORS AND INPUT DATA SIGNALS 20
4.9 INPUT SIGNAL TIMINGS 21
4.9.1 Timing characteristics 21
4.9.2 Input signal timing chart 21
4.10 LVDS DATA TARANSMISSION METHOD 22
4.11 DISPLAY POSITIONS 22
4.12 PIXEL ARRANGNMENT 23
4.13 OPTICS 24
4.13.1 Optical characteristics 24
4.13.2 Definition of contrast ratio 25
4.13.3 Definition of luminance uniformity 25
4.13.4 Definition of color uniformity 25
4.13.5 Definition of response times 26
4.13.6 Definition of viewing angles 26
4.14 DEFECT CRITERIA 27
4.14.1 Display specifications 27
4.14.2 Appearance specifications 30

CONTENTS

5. ESTIMATED LUMINANCE LIFETIME 31
6. PRODUCT INSPECTIONS 31
7. RELIABILITY TESTS 32
8. MARKINGS 33
8.1 NAMEPLATE LABEL 33
8.2 BARCODE LABEL 33
8.3 OTHER MARKINGS 33
9. PACKING, TRANSPORTATION AND DELIVERY 34
9.1 INNER PACKING BOX 34
9.2 INSPECTION RECORD SHEET 34
9.3 TRANSPORTATION 34
9.4 SIZE AND WEIGHT FOR PACKING BOXES 34
9.5 OUTLINE FIGURE FOR PACKING 35
10. PRECAUTIONS 36
10.1 MEANING OF CAUTION SIGNS 36
10.2 CAUTIONS 36
10.3 ATTENTIONS 36
10.3.1 Handling of the product 36
10.3.2 Environment 37
10.3.3 Characteristics 37
10.3.4 Others 37
11. OUTLINE DRAWINGS 38
11.1 FRONT VIEW 38
11.2 REAR VIEW 39

REVISION HISTORY 40

1. OUTLINE

1.1 STRUCTURE AND PRINCIPLE

Color LCD module NL160120AC27-37 is composed of the amorphous silicon thin film transistor liquid crystal display (a-Si TFT LCD) panel structure with driver LSIs for driving the TFT (Thin Film Transistor) array and a backlight.

The a-Si TFT LCD panel structure is injected liquid crystal material into a narrow gap between the TFT array glass substrate and a Color-filter glass substrate.

Grayscale data signals from a host system (e.g. signal generator, etc.) are modulated into best form for active matrix system by a signal processing board, and sent to the driver LSIs which drive the individual TFT arrays.

The TFT array as an electro-optical switch regulates the amount of transmitted light from the backlight assembly, when it is controlled by data signals. Color images are created by regulating the amount of transmitted light through the TFT array.

1.2 APPLICATION

- Color monitor system

1.3 FEATURES

- Ultra-wide viewing angle (Super Fine TFT (SFT))
- High luminance
- High contrast
- High resolution
- Low reflection
- Wide color gamut
- 256 gray scale in each R, G, B sub-pixel (8-bit), 16,777,216 colors
- LVDS interface
- Selectable LVDS data input map
- Small foot print
- LED backlight type
- LED driver circuit Built-in

2. GENERAL SPECIFICATIONS

Display area	432.0 (H) × 324.0 (V) mm
Diagonal size of display	54cm (21.3 inches)
Drive system	a-Si TFT active matrix
Display color	16,777,216 colors
Pixel	1,600 (H) × 1,200 (V) pixels (1 pixel consists of 3 sub-pixels (RGB).)
Pixel arrangement	RGB vertical stripe
Sub-pixel pitch	0.090 (H) × 0.270 (V) mm
Pixel pitch	0.270 (H) × 0.270 (V) mm
Module size	457.0 (W) × 350.0 (H) × 21.5 (D) mm (typ.)
Weight	2,700 g (typ.)
Contrast ratio	1,400:1 (typ.)
Viewing angle	*At the contrast ratio ≥ 10:1* • Horizontal: Right side 88° (typ.), Left side 88° (typ.) • Vertical: Up side 88° (typ.), Down side 88° (typ.)
Designed viewing direction	Viewing angle with optimum grayscale (γ≒DICOM): Normal axis (perpendicular) Note1
Polarizer surface	Antiglare
Polarizer pencil-hardness	2H (min.) [by JIS K5600]
Color gamut	*At LCD panel center* 72 % (typ.)[against NTSC color space]
Response time	*Ton+Toff (10%←→90%)* 40ms (typ.)
Luminance	*At the maximum luminance control* 900cd/m^2 (typ.)
Signal system	2 ports LVDS interface (Characteristics of AC receiver THC63LVD824A, THine Electronics, Inc. or equivalent) [RGB 8-bit signals, Data enable signal (DE), Dot clock (CLK)]
Power supply voltage	LCD panel signal processing board: 12.0V LED driver board: 12.0V
Backlight	LED backlight type built in LED Driver Circuit
Power consumption	*At checkered flag pattern, the maximum luminance control* 57.0W (typ.)

Note1: When the product luminance is 450cd/m^2, the gamma characteristic is designed to γ≒DICOM.

3. BLOCK DIAGRAM

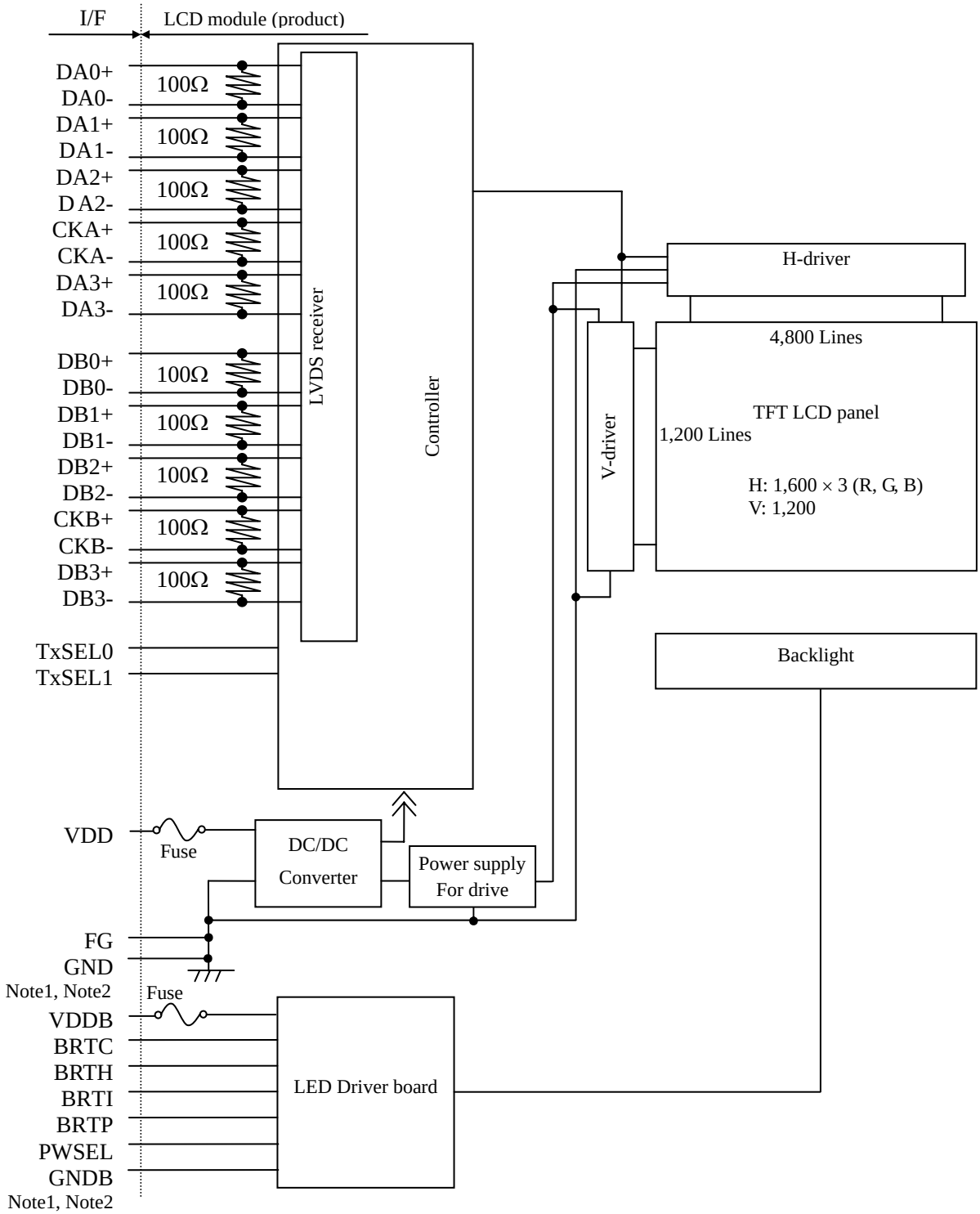

Note1: Relations between GND (Signal ground), FG (Frame ground) and GNDB (LED driver board ground) in the LCD module are as follows.

GND- FG	Connected
GND- GNDB	Not connected
FG- GNDB	Not connected

Note2 GND, FG and GNDB must be connected to customer equipment's ground, and it is recommended that these grounds be connected together in customer equipment.

Note3 Each pair of the LVDS signal has a 100Ω terminating resistance between D+ and D-.

4. DETAILED SPECIFICATIONS

4.1 MECHANICAL SPECIFICATIONS

Parameter	Specification		Unit
Module size	457.0 ±0.5 (W) × 350.0 ±0.5 (H) × 21.5 (typ., D) 23.0 (max. D)	Note1, Note2	mm
Display area	432.0 (H) × 324.0 (V)	Note2	mm
Weight	2,700 (typ.), 2,980 (max.)		g

Note1: Excluding warpage of the cover for LED driver board.
Note2: See "**11. OUTLINE DRAWINGS**".

4.2 ABSOLUTE MAXIMUM RATINGS

Parameter			Symbol	Rating	Unit	Remarks
Power supply voltage	LCD panel signal processing board		VDD	-0.3 to +14.0	V	Ta= 25°C
	LED driver board		VDDB	-0.3 to +15.0	V	
Input voltage for signals	LCD panel signal processing board Note1		Vi	-0.3 to +3.45	V	VDD= 12.0V
	LED driver board	BRTI signal	VBI	-0.3 to +1.5	V	VDDB= 12.0V
		BRTP signal	VBP	-0.3 to +5.5	V	
		BRTC signal	VBC	-0.3 to +5.5	V	
		PWSEL signal	VBS	-0.3 to +5.5	V	
Storage temperature		Note6	Tst	-20 to +60	°C	-
Operating temperature Note6		Front surface	TopF	0 to +60	°C	Note2
		Rear surface	TopR	0 to + 60	°C	Note3
Relative humidity Note4, Note6			RH	≤ 95	%	Ta ≤ 40°C
				≤ 85	%	40°C < Ta ≤ 50°C
				≤ 70	%	50°C < Ta ≤ 55°C
Absolute humidity Note4 Note6			AH	≤ 73 Note5	g/m^3	Ta > 55°C
Operating altitude			-	≤ 5,100	m	0°C ≤ Ta ≤ 55°C
Storage altitude			-	≤ 13,600	m	-20°C ≤ Ta ≤ 60°C

Note1: DA0+/-, DA1+/-, DA2+/-, DA3+/-, CKA+/-, DB0+/-, DB1+/-, DB2+/-, DB3+/-, CKB+/-
Note2: Measured at LCD panel surface (including self-heat)
Note3: Measured at LCD module's rear shield surface (including self-heat)
Note4: No condensation
Note5: Water amount at Ta= 55°C and RH= 70%
Note6: The image quality may cause degradation in case of rapid change humidity and temperature.

4.3 ELECTRICAL CHARACTERISTICS

4.3.1 LCD panel signal processing board

(Ta= 25°C)

Parameter		Symbol	min.	typ.	max.	Unit	Remarks
Power supply voltage		VDD	10.8	12.0	13.2	V	-
Power supply current		IDD	-	500 Note1	700 Note2	mA	at VDD= 12.0V
Permissible ripple voltage		VRP	-	-	100	mVp-p	for VDD
Differential input threshold voltage	High	VTH	-	-	+100	mV	at VCM= 1.2V Note3, Note4
	Low	VTL	-100	-	-	mV	
Input voltage swing		VI	0	-	2.4	V	Note4
Terminating resistance		RT	-	100	-	Ω	-

Note1: Checkered flag pattern (by EIAJ ED-2522)
Note2: Pattern for maximum current
Note3: Common mode voltage for LVDS driver
Note4: DA0+/-, DA1+/-, DA2+/-, DA3+/-, CKA+/-, DB0+/-, DB1+/-, DB2+/-, DB3+/-, CKB+/-

4.3.2 LED Driver board

(Ta= 25°C)

Parameter			Symbol	min.	typ.	max.	Unit	Remarks
Power supply voltage			VDDB	11.4	12.0	12.6	V	-
Power supply current			IDDB	-	4,200	5,800	mA	VDDB= 12.0V, At the maximum luminance control
Input voltage for signals	BRTI signal		VBI	0	-	1.0	V	-
	BRTP signal	High	VBPH	2.0	-	5.25	V	
		Low	VBPL	0	-	0.8	V	
	BRTC signal	High	VBCH	2.0	-	5.25	V	
		Low	VBCL	0	-	0.8	V	
	PWSEL signal	High	VBSH	2.0	-	5.25	V	
		Low	VBSL	0	-	0.8	V	
Input current for signals	BRTI signal		IBI	-200	-	-100	µA	
	BRTP signal	High	IBPH	-	-	1,000	µA	
		Low	IBPL	-600	-	-	µA	
	BRTC signal	High	IBCH	-	-	300	µA	
		Low	IBCL	-300	-	-	µA	
	PWSEL signal	High	IPSH	-	-	1,000	µA	
		Low	IPSL	-600	-	-	µA	

4.3.3 LED Driver board current wave

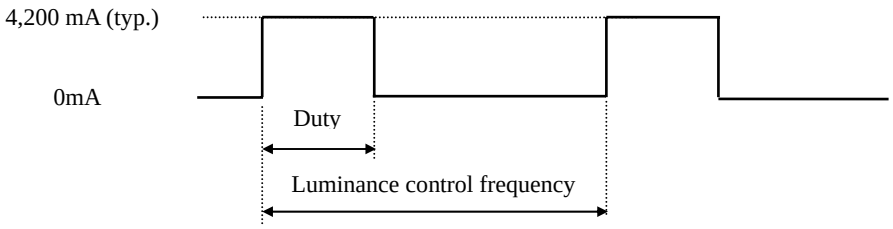

Duty: At the maximum luminance control 100% to at the minimum luminance control 1%.
Luminance control frequency: 270Hz (typ.)

Note1: Luminance control frequency indicate the input pulse frequency, when select the external pulse control. See "**4.6.2 Detail of BRTP timing**".

Note2: The power supply lines (VDDB and GNDB) have large ripple voltage during luminance control. See "**4.3.4 Power supply voltage ripple** ".
There is the possibility that the ripple voltage produces acoustic noise and signal wave noise in audio circuit and so on. Put a capacitor (5,000 to 6,000µF) between the power supply lines (VDDB and GNDB) to reduce the noise, if the noise occurred in the circuit.

4.3.4 Power supply voltage ripple

This product works, even if the ripple voltage levels are beyond the permissible values as following the table, but there might be noise on the display image.

Power supply voltage		Ripple voltage Note1 (Measure at input terminal of power supply)	Unit
VDD	12.0V	≤ 100	mVp-p
VDDB	12.0V	≤ 200	mVp-p

Note1: The permissible ripple voltage includes spike noise.
Note2: The load variation influence does not include.

Example of the power supply connection

a) Separate the power supply

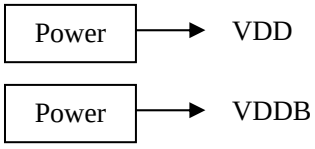

b) Put in the filter

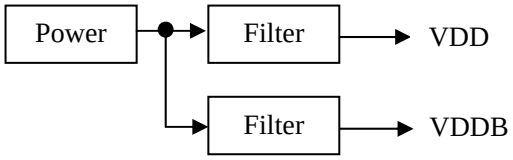

4.3.5 Fuse

Parameter	Fuse		Rating	Fusing current	Remarks
	Type	Supplier			
VDD	FCC16132AB	KAMAYA ELECTRIC Co., Ltd.	1.25A 32V	2.5A, 5 seconds maximum	Note1
VDDB	CCF1N10	KOA Corporation	10A 60V	20 A, 1 seconds maximum	
	TF16AT5.00T		5.0A 32V	10 A, 5 seconds maximum	

Note1: The power supply capacity should be more than the fusing current. If it is less than the fusing current, the fuse may not blow in a short time, and then nasty smell, smoke and so on may occur.

4.4 POWER SUPPLY VOLTAGE SEQUENCE

4.4.1 LCD panel signal processing board

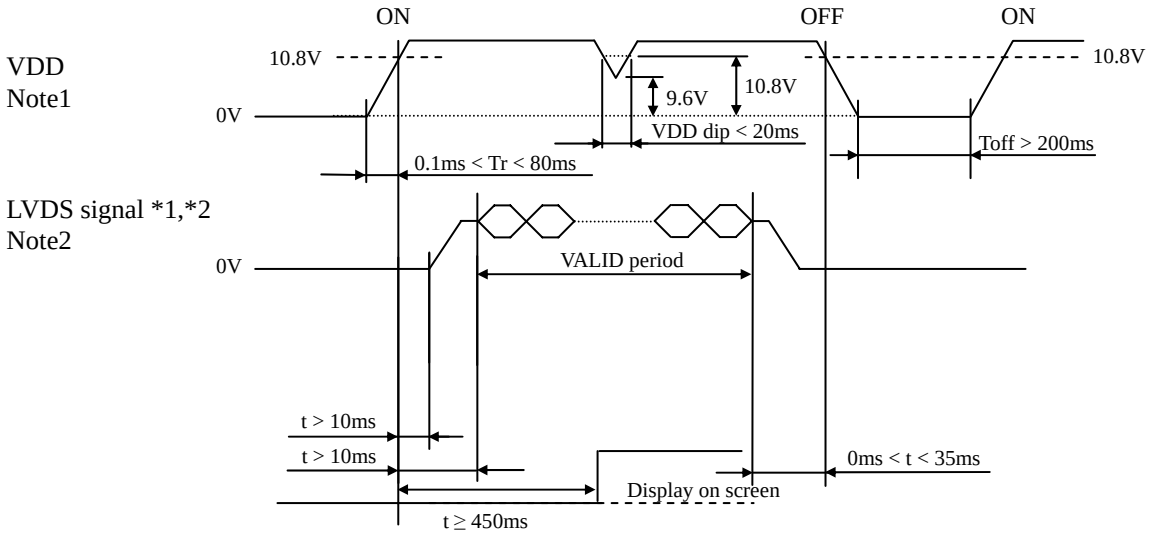

*1: A0+/-, DA1+/-, DA2+/-, DA3+/-, CKA+/-, DB0+/-, DB1+/-, DB2+/-, DB3+/- and CKB+/-

*2: LVDS signals should be measured at the terminal of 100 Ω resistance.

Note1: If there is a voltage variation (voltage drop) at the rising edge of VCC below 10.8V, there is a possibility that a product does not work due to a protection circuit.

Note2: LVDS signals must be set to Low or High-impedance, except the VALID period (See above sequence diagram), in order to avoid the circuitry damage.
If some of signals are cut while this product is working, even if the signal input to it once again, it might not work normally. If a customer stops the display and function signals, VDD also must be shut down.

Note3: The backlight should be turned on within the valid period of LVDS signals, in order to avoid unstable data display.

4.4.2 LED driver board

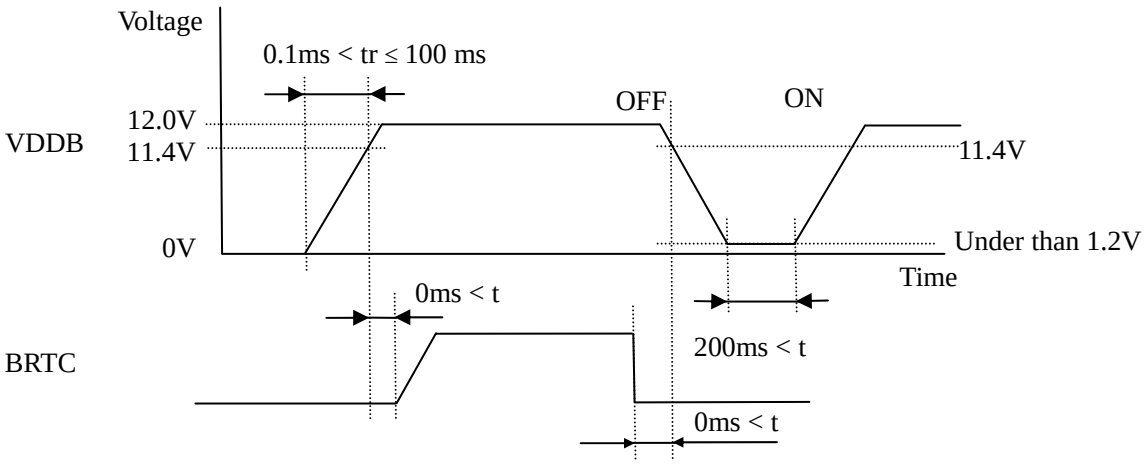

Note1: The backlight should be turned on within the valid period of LVDS signals, in order to avoid unstable data display.

Note2: If tr is more than 100 ms, the backlight will be turned off by a protection circuit for LED driver board.

Note3: When VDDB is 0V or BRTC is Low, PWSEL must be set to Low or Open.

4.5 CONNECTIONS AND FUNCTIONS FOR INTERFACE PINS

4.5.1 LCD panel signal processing board

(1) CN1

CN1 socket (LCD module side): DF19G-30P-1H (56) (HIROSE ELECTRIC Co,.Ltd.)
Adaptable plug: DF19-30S-1C (HIROSE ELECTRIC Co,.Ltd.)

Pin No.	Symbol	Signal	Remarks
1	DA0-	Pixel data A0	Odd pixel data input (LVDS DIFFERENTIAL DATA) Note1
2	DA0+		
3	DA1-	Pixel data A1	Odd pixel data input (LVDS DIFFERENTIAL DATA) Note1
4	DA1+		
5	DA2-	Pixel data A2	Odd pixel data input (LVDS DIFFERENTIAL DATA) Note1
6	DA2+		
7	GND	Ground	Signal ground Note2
8	CKA-	Pixel clock	Odd pixel clock input (LVDS DIFFERENTIAL DATA) Note1
9	CKA+		
10	DA3-	Pixel data A3	Odd pixel data input (LVDS DIFFERENTIAL DATA) Note1
11	DA3+		
12	DB0-	Pixel data B0	Even pixel data input (LVDS DIFFERENTIAL DATA) Note1
13	DB0+		
14	GND	Ground	Signal ground Note2
15	DB1-	Pixel data B1	Even pixel data input (LVDS DIFFERENTIAL DATA) Note1
16	DB1+		
17	GND	Ground	Signal ground Note2
18	DB2-	Pixel data B2	Even pixel data input (LVDS DIFFERENTIAL DATA) Note1
19	DB2+		
20	CKB-	Pixel clock	Even pixel clock input (LVDS DIFFERENTIAL DATA) Note1
21	CKB+		
22	DB3-	Pixel data B3	Even pixel data input (LVDS DIFFERENTIAL DATA) Note1
23	DB3+		
24	GND	Ground	Signal ground Note2
25	TxSEL0	Select LVDS data input map	Note3, Note4
26	TxSEL1		
27	GND	Ground	Signal ground Note2
28	VDD	Power supply	12V Note2
29	VDD		
30	VDD		

TxSEL1	TxSEL0	Mode
Open	Open	A
Open	Low	B
Low	Open	C
Low	Low	A

Note1: Twist pair wires with 100Ω (Characteristic impedance) should be used between LCD panel signal processing board and LVDS transmitter.
Note2: All GND terminals should be used without any non-connected lines.
Note3: This terminal is pulled-up in the product.
Note4: See "**4.7 LVDS data input map**.

4.5.2 LED driver board

CN201 socket (LCD module side): DF3Z-10P-2H (2∗) (HIROSE ELECTRIC Co,.Ltd.)
Adaptable plug: DF3-10S-2C (HIROSE ELECTRIC Co,.Ltd.)

Pin No.	Symbol	Function	Description
1	GNDB	LED driver board ground	Note1
2	GNDB		
3	GNDB		
4	GNDB		
5	GNDB		
6	VDDB	Power supply	Note1
7	VDDB		
8	VDDB		
9	VDDB		
10	VDDB		

Note1: All VDDB and GNDB terminals should be used without any non-connected lines.

CN202 socket (LCD module side): IL-Z-9PL-SMTYE (Japan Aviation Electronics Industry Limited (JAE))
Adaptable plug: IL-Z-9S-S125C3 (Japan Aviation Electronics Industry Limited (JAE))

Pin No.	Symbol	Function	Description
1	GNDB	LED driver board ground	Note1
2	GNDB		
3	N. C.	-	Keep this pin Open.
4	BRTC	Backlight ON/OFF control signal	High or Open: Backlight ON Low Backlight OFF
5	BRTH	Luminance control terminal	Note2
6	BRTI		
7	BRTP	BRTP signal	
8	GNDB	LED driver board ground	Note1
9	PWSEL	Selection of luminance control signal method	Note2, Note3

Note1: All GNDB terminals should be used without any non-connected lines.
Note2: See "**4.6 LUMINANCE CONTROL** ".
Note3: When VDDB is 0V or BRTC is Low, PWSEL must be set to Low or Open.

4.5.3 Positions of socket

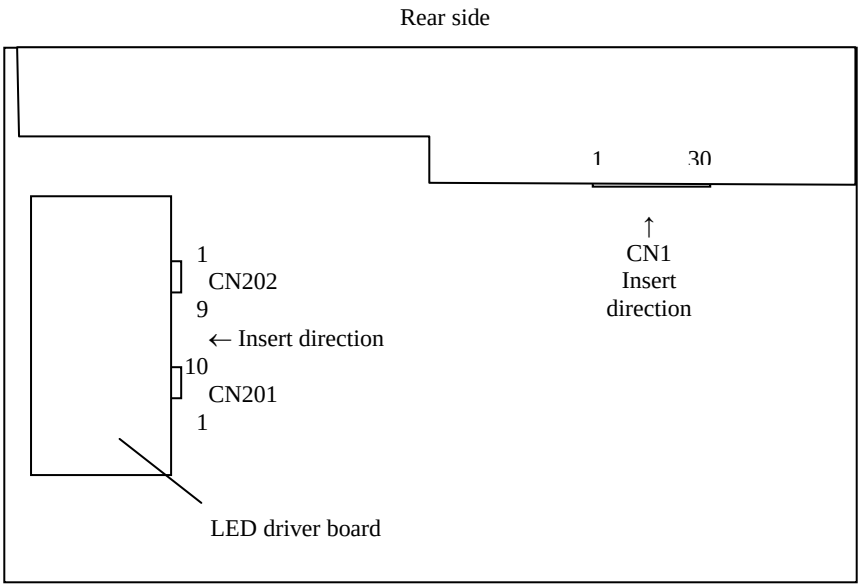

4.6 LUMINANCE CONTROL

4.6.1 Luminance control methods

<table>
<tr><th>Method</th><th>Adjustment and luminance ratio</th><th>PWSEL terminal</th><th>BRTP terminal</th></tr>
<tr><td>Variable resistor control

Note1</td><td>• Adjustment

The variable resistor (R) for luminance control should be 10kΩ ±5%, 1/10W. Minimum point of the resistance is the minimum luminance and maximum point of the resistance is the maximum luminance.
The resistor (R) must be connected between BRTH-BRTI terminals.
 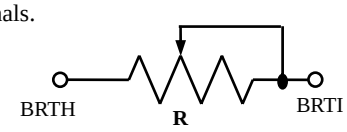

• Luminance ratio Note3
<table><tr><th>Resistance</th><th>Luminance ratio</th></tr><tr><td>0 kΩ</td><td>0% (Min. Luminance)</td></tr><tr><td>10 kΩ</td><td>100% (Max. Luminance)</td></tr></table></td><td rowspan="2">High or Open</td><td rowspan="2">Open</td></tr>
<tr><td>Voltage control

Note1</td><td>• Adjustment

Voltage control method works, when BRTH terminal is 0V and VBI voltage is input between BRTI-BRTH terminals. This control method can carry out continuation adjustment of luminance.
Luminance is the maximum when BRTI terminal is Open

• Luminance ratio Note3
<table><tr><th>BRTI Voltage (VBI)</th><th>Luminance ratio</th></tr><tr><td>0 V</td><td>0% (Min. Luminance)</td></tr><tr><td>1.0 V</td><td>100% (Max. Luminance)</td></tr></table></td></tr>
<tr><td>Pulse width modulation

Note1
Note2
Note4</td><td>• Adjustment

Pulse width modulation (PWM) method works, when PWSEL terminal is Low and PWM signal (BRTP signal) is input into BRTP terminal. The luminance is controlled by duty ratio of BRTP signal.

• Luminance ratio Note3
<table><tr><th>Duty ratio</th><th>Luminance ratio</th></tr><tr><td>0.01</td><td>1% (Min. Luminance)
(At frequency: 325 Hz)</td></tr><tr><td>1.0</td><td>100% (Max. Luminance)</td></tr></table></td><td>Low</td><td>BRTP signal</td></tr>
</table>

Note1: In case of the variable resistor control method and the voltage control method, noises may appear on the display image depending on the input signals timing for LCD panel signal processing board.
Use PWM method, if interference noises appear on the display image!

Note2: The LED driver board will stop working, if the Low period of BRTP signal is more than 50ms while BRTC signal is High or Open. Then the backlight will not turn on anymore, even if BRTP signal is input again. This is not out of order. The LED driver board will start to work when power is supplied again.

Note3: These data are the target values.

Note4: See "**4.6.2 Detail of BRTP timing**".

4.6.2 Detail of BRTP timing

(1) Timing diagrams

• Outline chart

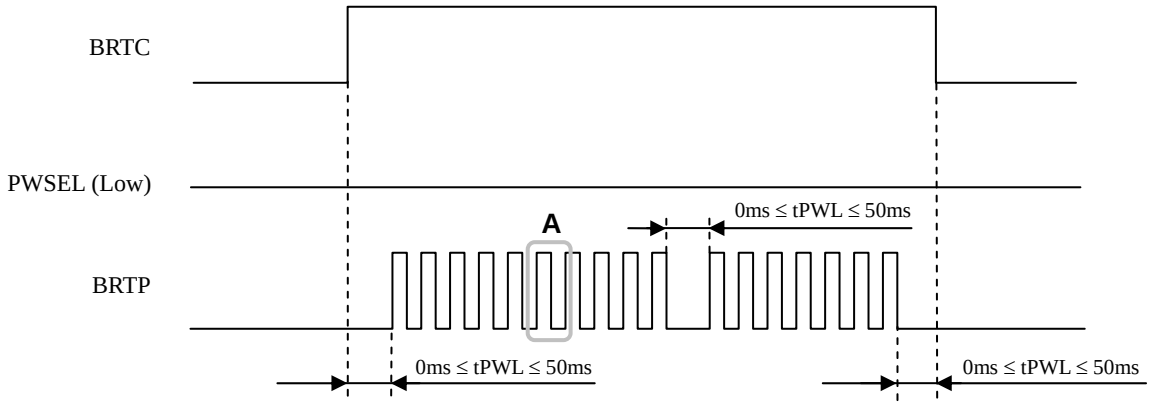

• Outline chart

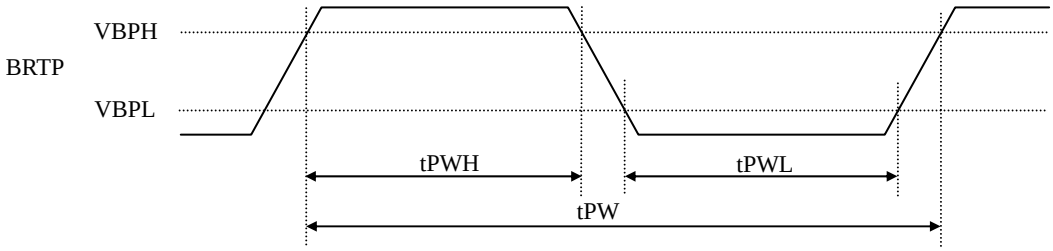

(2) Each parameter

Parameter	Symbol	min.	typ.	max.	Unit	Remarks
PWM frequency	f_{PWM}	185	-	1,000	Hz	Note1,2,3
PWM duty ratio	DR_{PWM}	1	-	100	%	Note4,5
PWM pulse width	tPWH	30	-	-	μs	Note1,4,5

Note1: Definition of parameters is as follows.

$$f_{PWM} = \frac{1}{tPW} \quad , DL = \frac{tPWH}{tPW}$$

Note2: A recommended f_{PWM} value is as follows.

$$f_{PWM} = \frac{2n-1}{4} \times fv$$

(n= integer, fv= frame frequency of LCD module)

Note3: Depending on the frequency used, so noise may appear on the screen, please conduct a thorough evaluation.

Note4: While the BRTC signal is high, do not set the tPWH (PWM pulse width) is less than 30μs. It may cause abnormal working of the backlight. In this case, turn the backlight off and then on again by BRTC signal.

Note5: Regardless of the PWM frequency, both PWM duty ratio and PWM pulse width must be always more than the minimum values.

4.7 LVDS data input map.

4.7.1 Mode A

Input data Note1			Transmitter Pin	THC63LVDF83D		Transmitter Pin	THC63LVD823B		CN1 Pin	CN1 Symbol
odd Pixel data	RA2	→	51	TA0		53	R12	Note 2		
	RA3	→	52	TA1		54	R13	TA1- →	1	DA0-
	RA4	→	54	TA2		57	R14	TA1+ →	2	DA0+
	RA5	→	55	TA3		58	R15			
	RA6	→	56	TA4		59	R16	TB1- →	3	DA1-
	RA7	→	3	TA5		60	R17	TB1+ →	4	DA1+
	GA2	→	4	TA6		63	G12			
	GA3	→	6	TB0		64	G13	TC1- →	5	DA2-
	GA4	→	7	TB1		65	G14	TC1+ →	6	DA2+
	GA5	→	11	TB2		66	G15		7	GND
	GA6	→	12	TB3		67	G16	TCLK1- →	8	CKA-
	GA7	→	14	TB4		68	G17	TCLK1+ →	9	CKA+
	BA2	→	15	TB5		73	B12			
	BA3	→	19	TB6		74	B13	TD1- →	10	DA3-
	BA4	→	20	TC0	1st	75	B14	TD1+ →	11	DA3+
	BA5	→	22	TC1		76	B15			
	BA6	→	23	TC2		77	B16			
	BA7	→	24	TC3		78	B17			
Note3	RSVD	→	27	TC4		7	RSVD			
Note3	RSVD	→	28	TC5		8	RSVD			
	DE	→	30	TC6		9	DE			
	RA0	→	50	TD0		51	R10			
	RA1	→	2	TD1		52	R11			
	GA0	→	8	TD2		61	G10			
	GA1	→	10	TD3		62	G11			
	BA0	→	16	TD4		69	B10			
	BA1	→	18	TD5		70	B11			
Note3	RSVD	→	25	TD6		-				
	CLK	→	31	CLKIN		10	CLK			
even Pixel data	RB2	→	51	TA0		81	R22			
	RB3	→	52	TA1		82	R23	TA2- →	12	DB0-
	RB4	→	54	TA2		83	R24	TA2+ →	13	DB0+
	RB5	→	55	TA3		84	R25		14	GND
	RB6	→	56	TA4		85	R26	TB2- →	15	DB1-
	RB7	→	3	TA5		86	R27	TB2+ →	16	DB1+
	GB2	→	4	TA6		91	G22		17	GND
	GB3	→	6	TB0		92	G23	TC2- →	18	DB2-
	GB4	→	7	TB1		93	G24	TC2+ →	19	DB2+
	GB5	→	11	TB2		94	G25			
	GB6	→	12	TB3		95	G26	TCLK2- →	20	CKB-
	GB7	→	14	TB4		96	G27	TCLK2+ →	21	CKB+
	BB2	→	15	TB5		99	B22			
	BB3	→	19	TB6		100	B23	TD2- →	22	DB3-
	RB4	→	20	TC0	2nd	1	B24	TD2+ →	23	DB3+
	RB5	→	22	TC1		2	B25		24	GND
	RB6	→	23	TC2		5	B26		25	TxSEL0
	RB7	→	24	TC3		6	B27		26	TxSEL1
Note3	RSVD	→	27	TC4		-			27	GND
Note3	RSVD	→	28	TC5		-			28	VDD
Note3	RSVD	→	30	TC6		-			29	VDD
	RB0	→	50	TD0		79	R20		30	VDD
	RB1	→	2	TD1		80	R21			
	GB0	→	8	TD2		89	G20			
	GB1	→	10	TD3		90	G21			
	BB0	→	16	TD4		97	B20			
	BB1	→	18	TD5		98	B21			
Note3	RSVD	→	25	TD6		-				
	CLK	→	31	CLKIN		-				

4.7.2 Mode B

	Input data	Note1		Transmitter Pin	DS90CF383, C385			CN1 Pin	CN1 Symbol
odd Pixel data		RA7	→	51	TXIN0	Note2			
		RA6	→	52	TXIN1	TA1-	→	1	DA0-
		RA5	→	54	TXIN2	TA1+	→	2	DA0+
		RA4	→	55	TXIN3				
		RA3	→	56	TXIN4	TB1-	→	3	DA1-
		RA2	→	3	TXIN6	TB1+	→	4	DA1+
		GA7	→	4	TXIN7				
		GA6	→	6	TXIN8	TC1-	→	5	DA2-
		GA5	→	7	TXIN9	TC1+	→	6	DA2+
		GA4	→	11	TXIN12			7	GND
		GA3	→	12	TXIN13	TCLK1-	→	8	CKA-
		GA2	→	14	TXIN14	TCLK1+	→	9	CKA+
		BA7	→	15	TXIN15				
		BA6	→	19	TXIN18	TD1-	→	10	DA3-
		BA5	→	20	TXIN19	1st TD1+	→	11	DA3+
		BA4	→	22	TXIN20				
		BA3	→	23	TXIN21				
		BA2	→	24	TXIN22				
	Note3	RSVD	→	27	TXIN24				
	Note3	RSVD	→	28	TXIN25				
		DE	→	30	TXIN26				
		RA1	→	50	TXIN27				
		RA0	→	2	TXIN5				
		GA1	→	8	TXIN10				
		CG0	→	10	TXIN11				
		RA1	→	16	TXIN16				
		GA0	→	18	TXIN17				
	Note3	RSVD	→	25	TXIN23				
		CLK	→	31	CLKIN				
even Pixel data		RB7	→	51	TXIN0				
		RB6	→	52	TXIN1	TA2-	→	12	DB0-
		RB5	→	54	TXIN2	TA2+	→	13	DB0+
		RB4	→	55	TXIN3			14	GND
		RB3	→	56	TXIN4	TB2-	→	15	DB1-
		RB2	→	3	TXIN6	TB2+	→	16	DB1+
		GB7	→	4	TXIN7			17	GND
		GB6	→	6	TXIN8	TC2-	→	18	DB2-
		GB5	→	7	TXIN9	TC2+	→	19	DB2+
		GB4	→	11	TXIN12				
		GB3	→	12	TXIN13	TCLK2-	→	20	CKB-
		GB2	→	14	TXIN14	TCLK2+	→	21	CKB+
		BB7	→	15	TXIN15				
		BB6	→	19	TXIN18	TD2-	→	22	DB3-
		BB5	→	20	TXIN19	2nd TD2+	→	23	DB3+
		BB4	→	22	TXIN20			24	GND
		BB3	→	23	TXIN21			25	TxSEL0
		BB2	→	24	TXIN22			26	TxSEL1
	Note3	RSVD	→	27	TXIN24			27	GND
	Note3	RSVD	→	28	TXIN25			28	VDD
	Note3	RSVD	→	30	TXIN26			29	VDD
		RB1	→	50	TXIN27			30	VDD
		RB0	→	2	TXIN5				
		GB1	→	8	TXIN10				
		GB0	→	10	TXIN11				
		BB1	→	16	TXIN16				
		BB0	→	18	TXIN17				
	Note3	RSVD	→	25	TXIN23				
		CLK	→	31	CLKIN				

4.7.3 Mode C

Input data		Note1		Transmitter Pin	DS90CF383, C385			CN1 Pin	CN1 Symbol
odd Pixel data		RA0	→	51	TXIN0	Note2			
		RA1	→	52	TXIN1	TA1-	→	1	DA0-
		RA2	→	54	TXIN2	TA1+	→	2	DA0+
		RA3	→	55	TXIN3				
		RA4	→	56	TXIN4	TB1-	→	3	DA1-
		RA5	→	3	TXIN6	TB1+	→	4	DA1+
		GA0	→	4	TXIN7				
		GA1	→	6	TXIN8	TC1-	→	5	DA2-
		GA2	→	7	TXIN9	TC1+	→	6	DA2+
		GA3	→	11	TXIN12			7	GND
		GA4	→	12	TXIN13	TCLK1-	→	8	CKA-
		GA5	→	14	TXIN14	TCLK1+	→	9	CKA+
		BA0	→	15	TXIN15				
		BA1	→	19	TXIN18	TD1-	→	10	DA3-
		BA2	→	20	TXIN19	1st TD1+	→	11	DA3+
		BA3	→	22	TXIN20				
		BA4	→	23	TXIN21				
		BA5	→	24	TXIN22				
	Note 3	RSVD	→	27	TXIN24				
	Note 3	RSVD	→	28	TXIN25				
		DE	→	30	TXIN26				
		RA6	→	50	TXIN27				
		RA7	→	2	TXIN5				
		GA6	→	8	TXIN10				
		GA7	→	10	TXIN11				
		BA6	→	16	TXIN16				
		BA7	→	18	TXIN17				
	Note 3	RSVD	→	25	TXIN23				
		CLK	→	31	CLKIN				
even Pixel data		RB0	→	51	TXIN0				
		RB1	→	52	TXIN1	TA2-	→	12	DB0-
		RB2	→	54	TXIN2	TA2+	→	13	DB0+
		RB3	→	55	TXIN3			14	GND
		RB4	→	56	TXIN4	TB2-	→	15	DB1-
		RB5	→	3	TXIN6	TB2+	→	16	DB1+
		GB0	→	4	TXIN7			17	GND
		GB1	→	6	TXIN8	TC2-	→	18	DB2-
		GB2	→	7	TXIN9	TC2+	→	19	DB2+
		GB3	→	11	TXIN12				
		GB4	→	12	TXIN13	TCLK2-	→	20	CKB-
		GB5	→	14	TXIN14	TCLK2+	→	21	CKB+
		BB0	→	15	TXIN15				
		BB1	→	19	TXIN18	TD2-	→	22	DB3-
		BB2	→	20	TXIN19	2nd TD2+	→	23	DB3+
		BB3	→	22	TXIN20			24	GND
		BB4	→	23	TXIN21			25	TxSEL0
		BB5	→	24	TXIN22			26	TxSEL1
	Note 3	RSVD	→	27	TXIN24			27	GND
	Note 3	RSVD	→	28	TXIN25			28	VDD
	Note 3	RSVD	→	30	TXIN26			29	VDD
		RB6	→	50	TXIN27			30	VDD
		RB7	→	2	TXIN5				
		GB6	→	8	TXIN10				
		GB7	→	10	TXIN11				
		BB6	→	16	TXIN16				
		BB7	→	18	TXIN17				
	Note 3	RSVD	→	25	TXIN23				
		CLK	→	31	CLKIN				

Note1: LSB (Least Significant Bit) – RA0, GA0, BA0, RB0, GB0, BB0
MSB (Most Significant Bit) – RA7, GA7, BA7, RB7, GB7, BB7
Note2: Twist pair wires with 100Ω (Characteristic impedance) should be used between LCD panel signal processing board and LVDS transmitter.
Note3: Input signal RSVD is not used inside the product, but do not keep pin open to avoid noise problem.

4.8 DISPLAY COLORS AND INPUT DATA SIGNALS

This product can display in equivalent to 16,777,216 colors in 256 gray scales in each RGB sub-pixel. Also the relation between display colors and input data signals is as the following table.

Display colors		Data signal (0: Low level, 1: High level)																									
		RA7	RA6	RA5	RA4	RA3	RA2	RA1	RA0	GA7	GA6	GA5	GA4	GA3	GA2	GA1	GA0	BA7	BA6	BA5	BA4	BA3	BA2	BA1	BA0
		RB7	RB6	RB5	RB4	RB3	RB2	RB1	RB0	GB7	GB6	GB5	GB4	GB3	GB2	GB1	GB0	BB7	BB6	BB5	BB4	BB3	BB2	BB1	BB0
Basic Colors	Black	0	0	0	0	0	0	0	0	0	0	0	0	0	0	0	0	0	0	0	0	0	0	0	0
	Blue	0	0	0	0	0	0	0	0	0	0	0	0	0	0	0	0	1	1	1	1	1	1	1	1
	Red	1	1	1	1	1	1	1	1	0	0	0	0	0	0	0	0	0	0	0	0	0	0	0	0
	Magenta	1	1	1	1	1	1	1	1	0	0	0	0	0	0	0	0	1	1	1	1	1	1	1	1
	Green	0	0	0	0	0	0	0	0	1	1	1	1	1	1	1	1	0	0	0	0	0	0	0	0
	Cyan	0	0	0	0	0	0	0	0	1	1	1	1	1	1	1	1	1	1	1	1	1	1	1	1
	Yellow	1	1	1	1	1	1	1	1	1	1	1	1	1	1	1	1	0	0	0	0	0	0	0	0
	White	1	1	1	1	1	1	1	1	1	1	1	1	1	1	1	1	1	1	1	1	1	1	1	1
Red gray scale	Black	0	0	0	0	0	0	0	0	0	0	0	0	0	0	0	0	0	0	0	0	0	0	0	0
		0	0	0	0	0	0	0	1	0	0	0	0	0	0	0	0	0	0	0	0	0	0	0	0
	dark	0	0	0	0	0	0	1	0	0	0	0	0	0	0	0	0	0	0	0	0	0	0	0	0
	↑					:								:								:			
	↓					:								:								:			
	bright	1	1	1	1	1	1	0	1	0	0	0	0	0	0	0	0	0	0	0	0	0	0	0	0
		1	1	1	1	1	1	1	0	0	0	0	0	0	0	0	0	0	0	0	0	0	0	0	0
	Red	1	1	1	1	1	1	1	1	0	0	0	0	0	0	0	0	0	0	0	0	0	0	0	0
Green gray scale	Black	0	0	0	0	0	0	0	0	0	0	0	0	0	0	0	0	0	0	0	0	0	0	0	0
		0	0	0	0	0	0	0	0	0	0	0	0	0	0	0	1	0	0	0	0	0	0	0	0
	dark	0	0	0	0	0	0	0	0	0	0	0	0	0	0	1	0	0	0	0	0	0	0	0	0
	↑					:								:								:			
	↓					:								:								:			
	bright	0	0	0	0	0	0	0	0	1	1	1	1	1	1	0	1	0	0	0	0	0	0	0	0
		0	0	0	0	0	0	0	0	1	1	1	1	1	1	1	0	0	0	0	0	0	0	0	0
	Green	0	0	0	0	0	0	0	0	1	1	1	1	1	1	1	1	0	0	0	0	0	0	0	0
Blue gray scale	Black	0	0	0	0	0	0	0	0	0	0	0	0	0	0	0	0	0	0	0	0	0	0	0	0
		0	0	0	0	0	0	0	0	0	0	0	0	0	0	0	0	0	0	0	0	0	0	0	1
	dark	0	0	0	0	0	0	0	0	0	0	0	0	0	0	0	0	0	0	0	0	0	0	1	0
	↑					:								:								:			
	↓					:								:								:			
	bright	0	0	0	0	0	0	0	0	0	0	0	0	0	0	0	0	1	1	1	1	1	1	0	1
		0	0	0	0	0	0	0	0	0	0	0	0	0	0	0	0	1	1	1	1	1	1	1	0
	Blue	0	0	0	0	0	0	0	0	0	0	0	0	0	0	0	0	1	1	1	1	1	1	1	1

4.9 INPUT SIGNAL TIMINGS

4.9.1 Timing characteristics

Parameter		Symbol	min.	typ.	max.	Unit	Remarks
CLK	Frequency	1/ tc	60.0	64.5	65.0	MHz	LVDS transmitter input
	Pulse width	tc	15.38	15.5	-	ns	
	Duty	-	See the data sheet of LVDS transmitter.			-	-
	Rise, fall	-				ns	
Horizontal	Cycle	th	13.1	13.3	19.2	µs	75.18kHz(typ.) Note1
			848	860	1,156	CLK	
	Display period	thd	800			CLK	-
Vertical	Cycle	tv	16.95	16.667	16.4	ms	60.0Hz(typ.)
		tv	1,206	1,250	-	H	
	Display period	tvd	1,200			H	-
DE, DATA	Setup time	-	See the data sheet of LVDS transmitter.			ns	-
	Hold time	-				ns	
	Rise, fall	-				ns	

Note1: During operation, fluctuation of horizontal cycle should be within ±1 CLK.

4.9.2 Input signal timing chart

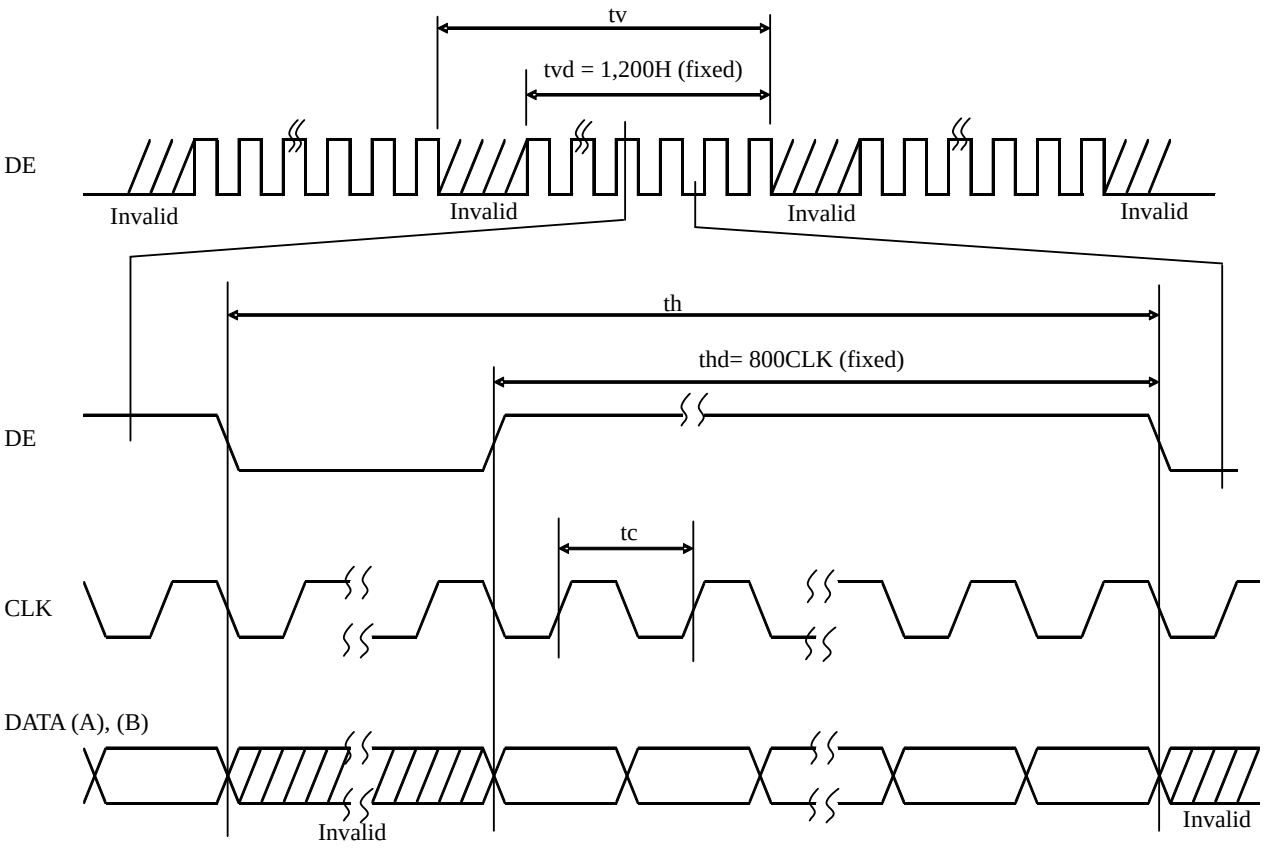

4.10 LVDS DATA TARANSMISSION METHOD

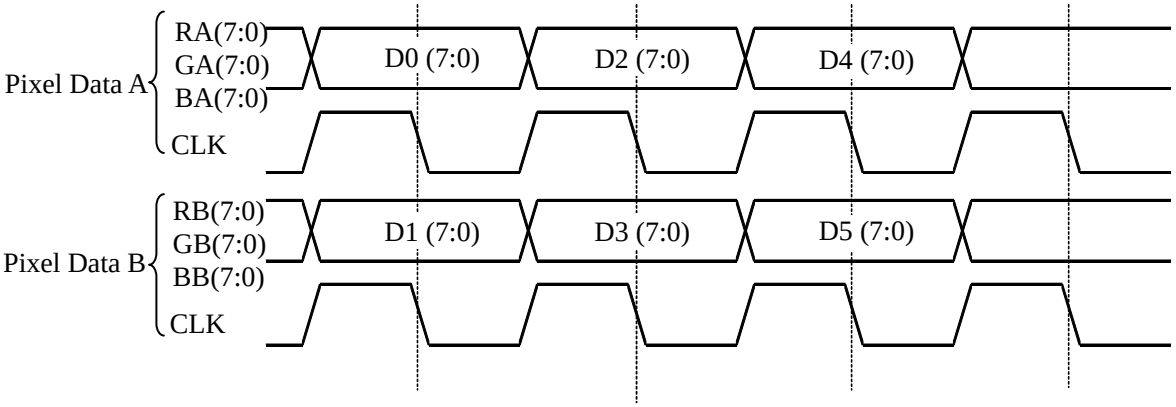

4.11 DISPLAY POSITIONS

Odd pixel: RA= R data
GA= G data
BA= B data

Even pixel: RB= R data
GB= G data
BB= B data

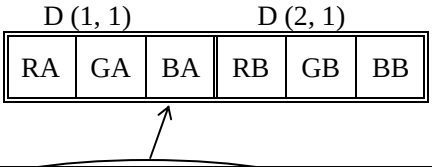

D(1, 1)	D (2, 1)	• • •	D (X, 1)	• • •	D (1599, 1)	D (1600, 1)
D (1, 2)	D (2, 2)	• • •	D (X, 2)	• • •	D (1599, 2)	D (1600, 2)
• • •	• • •	• • • •	• • •	• • • •	• • •	• • • •
D (1, Y)	D (2, Y)	• • •	D (X, Y)	• • •	D (1599, Y)	D (1600, Y)
• • •	• • •	• • • •	• • •	• • • •	• • •	• • • •
D (1, 1199)	D (2, 1199)	• • •	D (X, 1199)	• • •	D (1599, 1199)	D (1600, 1199)
D (1, 1200)	D (2, 1200)	• • •	D (X, 1200)	• • •	D (1599, 1200)	D (1600, 1200)

4.12 PIXEL ARRANGNMENT

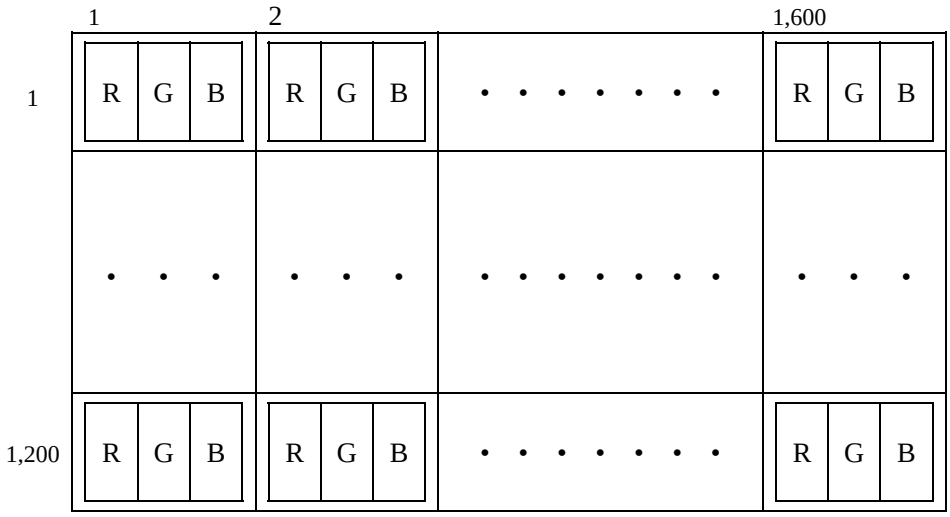

4.13 OPTICS

4.13.1 Optical characteristics

(Note1, Note2)

Parameter		Condition	Symbol	min.	typ.	max.	Unit	Measuring instrument	Remarks
Luminance		White at center θR= 0°, θL= 0°, θU= 0°, θD= 0°	L	670	900	-	cd/m^2	BM-5A or SR-3	Note3
Contrast ratio		White/Black at center θR= 0°, θL= 0°, θU= 0°, θD= 0°	CR	1,000	1,400	-	-	BM-5A or SR-3	Note3 Note5
Luminance uniformity		255/255 gray scale θR= 0°, θL= 0°, θU= 0°, θD= 0°	LU$_{255}$	80	-	-	%	BM-5A or SR-3	Note4 Note6
Chromaticity	White	**x** coordinate	Wx	0.269	0.299	0.329	-	SR-3	Note3 Note8
		y coordinate	Wy	0.285	0.315	0.345	-		
	Red	**x** coordinate	Rx	-	0.65	-	-		
		y coordinate	Ry	-	0.33	-	-		
	Green	**x** coordinate	Gx	-	0.29	-	-		
		y coordinate	Gy	-	0.60	-	-		
	Blue	**x** coordinate	Bx	-	0.15	-	-		
		y coordinate	By	-	0.07	-	-		
Color gamut		θR= 0°, θL= 0°, θU= 0°, θD= 0° at center, against NTSC color space	C	65	72	-	%	SR-3	Note3
Color uniformity		204/255 gray scale θR= 0°, θL= 0°, θU= 0°, θD= 0°	Δu'v'	-	-	0.01	-	SR-3	Note4 Note7
Response time		Black to White	Ton	-	20	30	ms	BM-5A -10000	Note9 Note10
		White to Black	Toff	-	20	30	ms		
Viewing angle	Right	θU= 0°, θD= 0°, CR≥ 10	θR	70	88	-	°	BM-5A or EZ Contrast	Note3 Note11
	Left	θU= 0°, θD= 0°, CR≥ 10	θL	70	88	-	°		
	Up	θR= 0°, θL= 0°, CR≥ 10	θU	70	88	-	°		
	Down	θR= 0°, θL= 0°, CR≥ 10	θD	70	88	-	°		

Note1: These are initial characteristics.
Note2: Measurement conditions are as follows.
Ta= 25°C, VDD= 12.0V, VDDB= 12.0V, PWM: Duty 100%, Display mode: UXGA,
Horizontal cycle= 1/75.19 kHz, Vertical cycle= 1/60.0Hz

Optical characteristics are measured at luminance saturation 20minutes after the product works in the dark room. Also measurement methods are as follows.

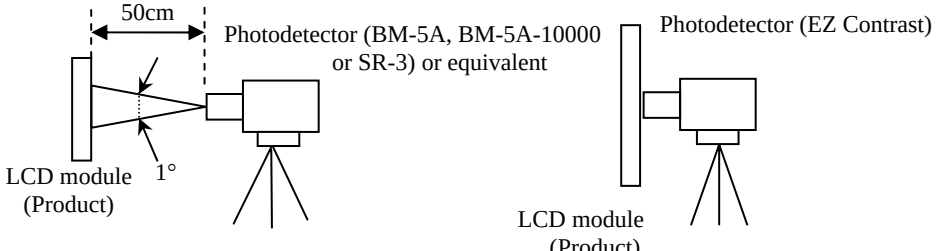

Note3: Product surface temperature at the maximum luminance control: TopF= 32°C,TopR= 43°C
Note4: Product surface temperature at 450cd/m^2 luminance control: TopF= 30°C,TopR= 38°C
Temperature difference in display area: Δ10°C
Note5: See "**4.13.2 Definition of contrast ratio**".
Note6: See "**4.13.3 Definition of luminance uniformity**".
Note7: See "**4.13.4 Definition of color uniformity**".
Note8: These coordinates are found on CIE 1931 chromaticity diagram.
Note9: See "**4.13.5 Definition of response times**".
Note10: Product surface temperature TopF= 35°C
Note11: See "**4.13.6 Definition of viewing angles**".

4.13.2 Definition of contrast ratio

The contrast ratio is calculated by using the following formula.

$$\text{Contrast ratio (CR)} = \frac{\text{Luminance of white screen}}{\text{Luminance of black screen}}$$

4.13.3 Definition of luminance uniformity

The luminance uniformity is calculated by using following formula.

$$\text{Luminance uniformity (LUxx)} = \frac{\text{Minimum luminance from ① to ⑨}}{\text{Maximum luminance from ① to ⑨}}$$

xx: 256 gray scale.

The luminance is measured at near the 9 points shown below.

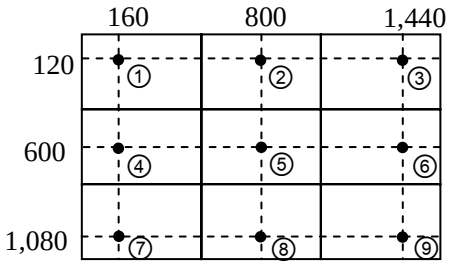

4.13.4 Definition of color uniformity

The color (u', v') is measured at near the 9 points shown below

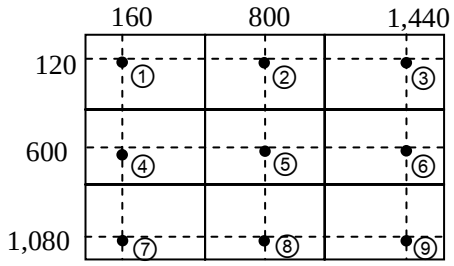

The color uniformity in each measuring point is calculated by using the following formula.

$$\text{Color uniformity}(\Delta u'v') = \sqrt{(u'_x - u'_y)^2 + (v'_x - v'_y)^2}$$

u'_x, v'_x: u', v' value at measuring point x.
u'_y, v'_y: u', v' value at measuring point y.

4.13.5 Definition of response times

Response time is measured at the time when the luminance changes from "black" to "white", or "white" to "black" on the same screen point, by photo-detector. Ton is the time when the luminance changes from 10% up to 90%. Also Toff is the time when the luminance changes from 90% down to 10% (See the following diagram.).

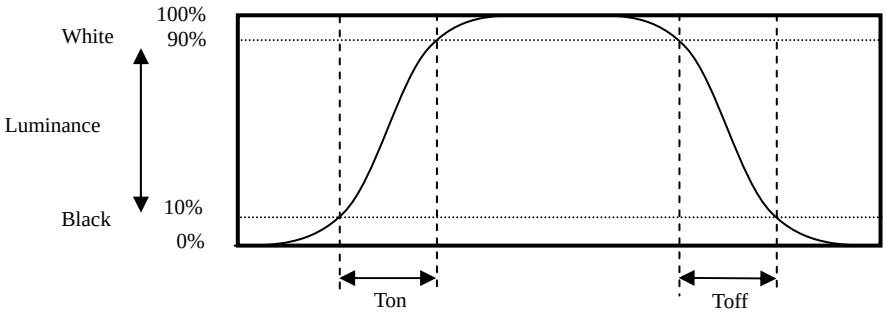

4.13.6 Definition of viewing angles

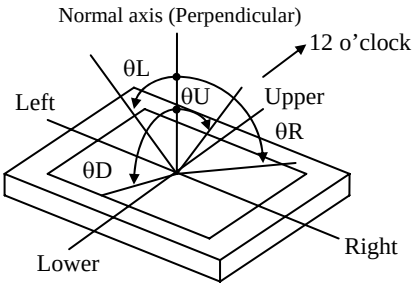

4.14 DEFECT CRITERIA

4.14.1 Display specifications

(1) Line defects/Pixel Defects

(Note1)

Defect pattern	Condition			Criteria	Remarks
Line defect	-			0 line	-
Bright dots	Full bright dots Note2			1 dot	-
	Half bright dots Note3	Single defect dot		≤10dots	-
		Linked defect dots (D = 0 mm) Note5	2 defect dots	≤1set	Note6
			3 defect dots or more	0 set	Note7
Dark dots Note4	Single defect dot			≤15dots	-
	Linked defect dots (D = 0 mm) Note5		2 defect dots	≤8set	Note6
			3 -4 defect dots	≤1set	Note7
Close defect dots	Close 2 same color bright dot		Distance between each bright dots ≤6.5mm	R, G, B ≤4 sets each	Note8
Total	Bright dots + Dark dots			≤20dots	-

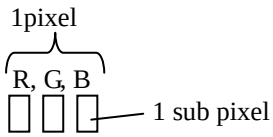

Note1: Inspection conditions are as follows.

Temperature	25 ± 5 °C
Inspection viewing distance	20 cm (The distance between the inspector's eye and screen.)
Inspection direction	0° ≤ θR ≤ 20°, 0° ≤ θL ≤ 20°
	0° ≤ θU ≤ 20°
Inspection illumination	60 lx (at a display surface)
Luminance	400cd/m^2

Note2: Definition of full bright dot
The full bright dot can be recognized at 160/255 gray scale in full screen in spite of bright dot size.

Note3: Definition of half bright dot
The half bright dot can be recognized at 60/255 gray scale in full screen and the defect area is larger than 1/3 of a sub-pixel.

Note4: Definition of dark dot
The dark dot can be recognized at 400cd/m^2 and the defect area is larger than 1/3 of a sub-pixel.

Note5: **D** is the distance between defect dots.

Note6: Linked 2 dots

Counted as NG	
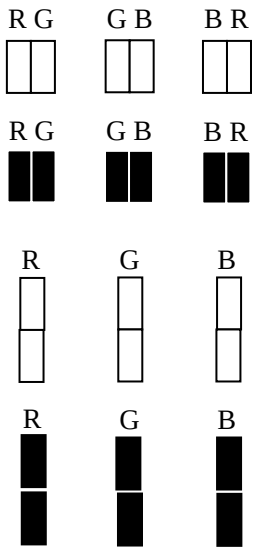	The following combinations are also counted. 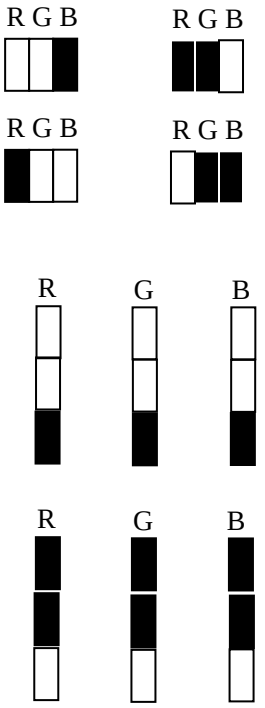

Not counted	
Combinations of bright and dark dots 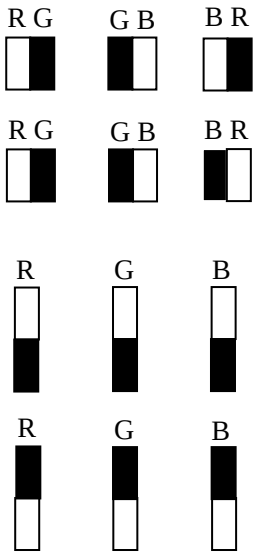	Combinations other than linked 2 defect dots 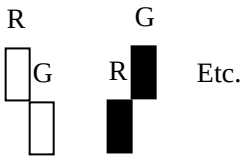

Note7: Linked 3-4 dots

Counted as NG	Not counted
All of dots are bright dots and dark dots (The Defect criteria for linked 4 or 5 dots are under discussion.) 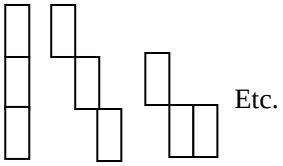 Etc. Etc.	Combinations of bright and dark dots 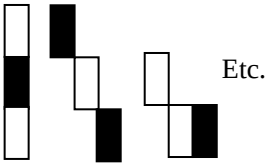 Etc.

Note8: Close 2 same color bright dots

Counted as NG	Not counted	
	Combinations of bright and dark dots	Combinations of different color dots
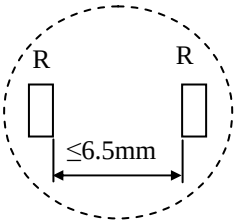	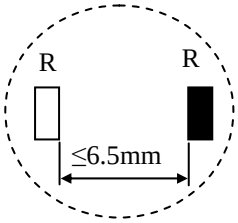	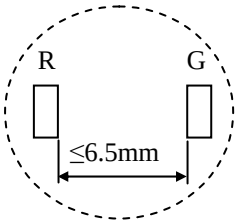

4.14.2 Appearance specifications

Defect pattern		Condition		Note1	Criteria
Impure ingredient Stains Dust	Dot shape	d < 0.2mm			Allowed
		0.2 mm ≤ d < 0.3 mm			≤ 10 points
		0.3 mm ≤ d ≤ 0.5 mm			≤ 3 points
		d > 0.5mm			0 point
		Linked impure ingredient			
	Line shape	W < 0.05 mm			Allowed
		0.05 mm ≤ W ≤ 0.1 mm	L < 0.7 mm		
			0.7 mm ≤ L ≤ 1.0 mm		≤ 4 points
			L > 1.0 mm		0 point
		W > 0.1 mm			
Bubbles, Wrinkles, Dent		d ≤ 0.2 mm			Allowed
		0.2 mm < d ≤ 0.5 mm			≤ 2 points
		d > 0.5 mm			0 point
Panel dent		d ≤ 0.2 mm			Allowed
		0.2 mm < d ≤ 0.5 mm			≤ 2 points
		d > 0.5 mm			0 point
Polarizer scratch		S ≤ 0.2 mm^2			Allowed
		S > 0.2 mm^2			0 point
Shape		Specified label must be put. There must not be a missing part.			

Note1: Definition of symbols is as follows.
d: Average diameter
(This diameter is the average length of a long axis and a short axis in each defect pattern.)
W: Width, L: Length, S: Area

Note2: Inspection conditions are as follows.

Temperature	25 ± 5 °C
Inspection viewing distance	20cm (The distance between the inspector's eye and screen.)
Inspection direction	0° ≤ θR ≤ 45°, 0° ≤ θL ≤ 45°
	0° ≤ θU ≤ 45°, 0° ≤ θD ≤ 45°
Illumination	700 lx (at an inspection desk surface)

5. ESTIMATED LUMINANCE LIFETIME

The luminance lifetime is the time from initial luminance to half-luminance.

This lifetime is the estimated value, and is not guarantee value.

Condition		Estimated luminance lifetime (Life time expectancy) Note1, Note2, Note3	Unit
LED elementary substance	25°C (Ambient temperature of the product) Continuous operation, PWM: Duty 100%	70,000	h
	60°C (Temperature of the product front or rear panel) Continuous operation, PWM: Duty 100%	60,000	

Note1: Life time expectancy is mean time to half-luminance.
Note2: Estimated luminance lifetime is not the value for an LCD module but the value for LED elementary substance.
Note3: By ambient temperature, the lifetime changes particularly. Especially, in case the product works under high temperature environment, the lifetime becomes short.

6. PRODUCT INSPECTIONS

The following inspections are carried out for products, before shipment

(1) 100% inspection
- Power supply current
- Display
- Appearance

(2) Sampling inspection
- White luminance
- Contrast ratio
- Luminance uniformity

7. RELIABILITY TESTS

Test item		Condition	Judgment Note1
High temperature and humidity (Operation)		① 60 ± 2°C, RH= 60%, 240hours ② Display data is white. Note2	No display malfunctions
Heat cycle (Operation)		① 0 ± 3°C 1hour 60 ± 3°C 1hour ② 50cycles, 4hours/cycle ③ Display data is white. Note2	
Thermal shock (Non operation)		① -20 ± 3°C 30minutes 60 ± 3°C 30minutes ② 100cycles, 1hour/cycle ③ Temperature transition time is within 5 minutes.	
Vibration (Non operation)		① 5 to 100Hz, 11.76m/s^2 ② 1 minute/cycle ③ X, Y, Z directions ④ 10 times each directions	No display malfunctions No physical damages
Mechanical shock (Non operation)		① 294m/s^2, 11ms ② X, Y, Z directions ③ 3 times each directions	
ESD (Operation)		① 150pF, 150Ω, ±10kV ② 9 places on a panel surface Note3 ③ 10 times each places at 1 sec interval	No display malfunctions
Low pressure	Non-operation	① 15 kPa (Equivalent to altitude 13,600m) ② -20°C±3°C 24 hours ③ +60°C±3°C 24 hours	No display malfunctions
	Operation	① 53.3kPa (Equivalent to altitude 5,100m) ② 0°C±3°C 24 hours ③ +55°C±3°C 24 hours Note2	

Note1: Display and appearance are checked under environmental conditions equivalent to the inspection conditions of defect criteria.
Note2: Luminance: 450cd/m^2 at luminance control.
Note3: See the following figure for discharge points

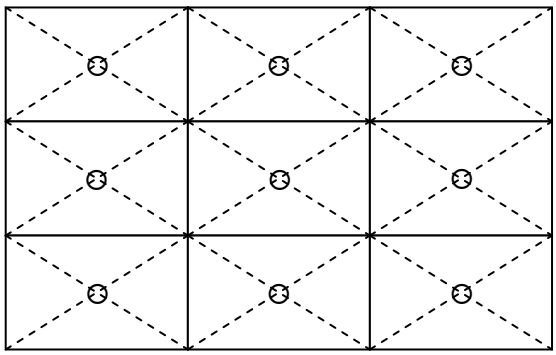

8. MARKINGS

The various markings are attached to this product. See "**11 OUTLINE DRAWINGS**" for attachment positions.

8.1 NAMEPLATE LABEL

Nameplate label

Note1: The meaning of lot number

- Example: A3310036

A	3	3	10036
Revision 1 letter (Alphabet)	**Manufacturing year** 1 figure of the A.D. end numbers (e.g.: A.D 2013 is 3.)	**Manufacturing month** 1 letter Jan. to Sep.: Number of month October: A November: B December: C	**Production number** Multi-letter

Note2: **Do not attach anything such as label and so on, on the nameplate!** In case repair the product, NLT needs the contents of nameplate such as the lot number, inspection date and so on, to identify the warranty period with individual product. If NLT cannot decipher the contents of nameplate, such repair shall be entitled to charge. Also NLT may give a new lot number to repair products.

8.2 BARCODE LABEL

Barcode label

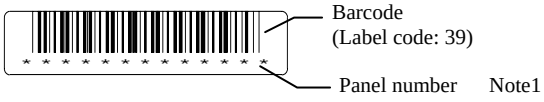

Note1: The same panel number is given to barcode label and nameplate label.

8.3 OTHER MARKINGS

Material information marking for diffuser

Material Information
Light Guide >PMMA<

9. PACKING, TRANSPORTATION AND DELIVERY

NLT will pack products to deliver to customer in accordance with NLT's packing specifications, and will deliver products to customer in such a condition that products will not suffer from a damage during transportation. The delivery conditions are as follows.

9.1 INNER PACKING BOX

(1) Inner packing box

5 products are packed as the maximum in an inner packing box (See "**9.5 OUTLINE FIGURE FOR PACKING**"). The type name and quantity are shown on outside of the inner packing box, either labeling or printing. In case the inner packing box with products is dropped from a height of 40cm or more, there is a risk of damage to products.

In case of shipping the product out of Japan, the product must not be transported only with the inner box, because there is a high risk of damage. Be sure to use an outer packing box which is shown below!

(2) Outer packing box

The inner box with products is packed in an outer packing box A or an outer packing box B (See "**9.5 OUTLINE FIGURE FOR PACKING**"). The type name and quantity are shown on outside of the outer packing box, either labeling or printing. In case the outer packing box with products is dropped from a height of 40cm or more, there is a risk of damage to products.

Outer packing box is used only when shipping the product out of Japan.

9.2 INSPECTION RECORD SHEET

Inspection record sheets are included in an inner packing box with products. It is summarized to a number of products for pass/fail assessment.

9.3 TRANSPORTATION

The product is transported by vehicle, aircraft or ship.

9.4 SIZE AND WEIGHT FOR PACKING BOXES

Parameter	Packing box type		Unit
	Inner packing box	Outer packing box	
Size	364(W) × 524(H) × 619(D) (typ.)	397(W) × 576(H) × 647(D) (typ.)	mm
Weight	2.5 (typ.)	1.9 (typ.)	kg
Total weight	16.0 (typ.) (with 5 products)	17.9 (typ.) (with an inner packing box and 5 products)	kg

9.5 OUTLINE FIGURE FOR PACKING

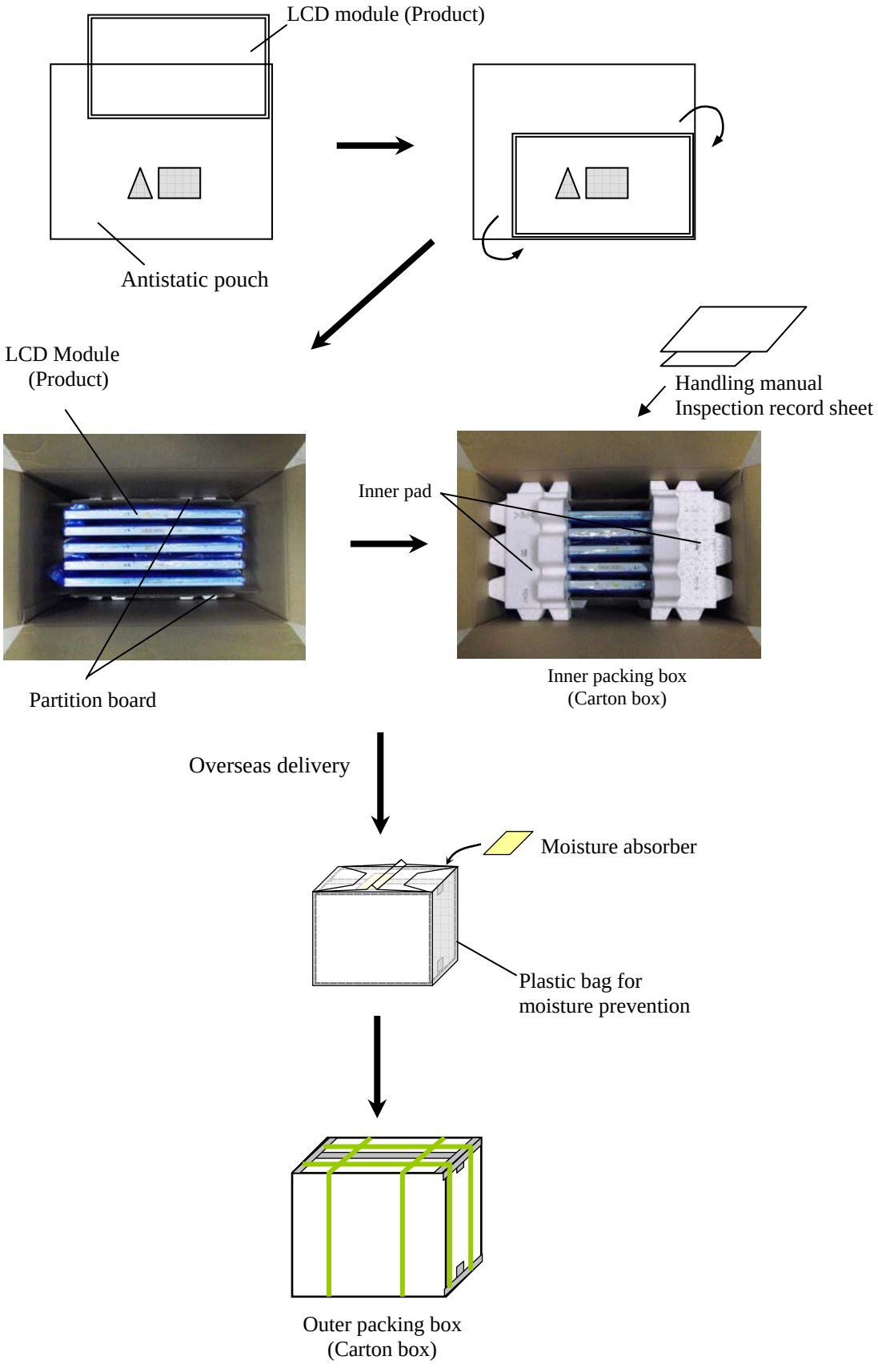

10. PRECAUTIONS

10.1 MEANING OF CAUTION SIGNS

The following caution signs have very important meaning. **Be sure to read "10.2 CAUTIONS" and "10.3 ATTENTIONS"!**

	This sign has the meaning that a customer will be injured or the product will sustain damage if the customer practices wrong operations.
	This sign has the meaning that a customer will be injured if the customer practices wrong operations.

10.2 CAUTIONS

* **Do not shock and press the LCD panel and the backlight! There is a danger of breaking, because they are made of glass. (Shock: Equal to or no greater than 294m/s^2 and equal to or no greater than 11ms, Pressure: Equal to or no greater than 19.6N (ϕ16mm jig))**

10.3 ATTENTIONS

10.3.1 Handling of the product

① Take hold of both ends without touching the circuit board when the product (LCD module) is picked up from inner packing box to avoid broken down or misadjustment, because of stress to mounting parts on the circuit board.
② Do not hook nor pull cables such as lamp cable, and so on, in order to avoid any damage.
③ When the product is put on the table temporarily, display surface must be placed downward.
④ When handling the product, take the measures of electrostatic discharge with such as earth band, ionic shower and so on, because the product may be damaged by electrostatic.
⑤ The torque for product mounting screws must never exceed 0.735N·m. Higher torque might result in distortion of the bezel. And the length of product mounting screws must be ≤ 5.0mm.
⑥ The product must be installed using mounting holes without undue stress such as bends or twist (See outline drawings). And do not add undue stress to any portion (such as bezel flat area). Bends or twist described above and undue stress to any portion may cause display mura. Recommended installing method: Ideal plane "A" is defined by one mounting hole (datum point) and other mounting holes. The ideal plane "A" should be the same plane within ±0.3 mm.

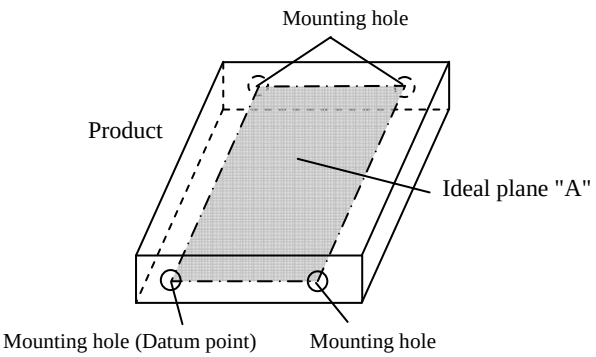

⑦ Do not press or rub on the sensitive product surface. When cleaning the product surface, wipe it with a soft dry cloth.
⑧ Do not push or pull the interface connectors while the product is working.
⑨ When handling the product, use of an original protection sheet on the product surface (polarizer) is recommended for protection of product surface. Adhesive type protection sheet may change color or characteristics of the polarizer.
⑩ Usually liquid crystals don't leak through the breakage of glasses because of the surface tension of thin layer and the construction of LCD panel. But, if you contact with liquid crystal by any chance, please wash it away with soap and water.

10.3.2 Environment

① Do not operate or store in high temperature, high humidity, dewdrop atmosphere or corrosive gases. Keep the product in packing box with antistatic pouch in room temperature to avoid dusts and sunlight, when storing the product.
② In order to prevent dew condensation occurred by temperature difference, the product packing box must be opened after enough time being left under the environment of an unpacking room. Evaluate the storage time sufficiently because dew condensation is affected by the environmental temperature and humidity. (Recommended leaving time: 6 hours or more with the original packing state after a customer receives the package)
③ Do not operate in high magnetic field. If not, circuit boards may be broken.
④ This product is not designed as radiation hardened.

10.3.3 Characteristics

The following items are neither defects nor failures.

① Response time, luminance and color may be changed by ambient temperature.
② Display mura, flickering, vertical streams or tiny spots may be observed depending on display patterns.
③ Do not display the fixed pattern for a long time because it may cause image sticking. Use a screen saver, if the fixed pattern is displayed on the screen.
④ The display color may be changed depending on viewing angle because of the use of condenser sheet in the backlight.
⑤ Optical characteristics may be changed depending on input signal timings.

10.3.4 Others

① All GND, GNDB, VDD and VDDB terminals should be used without any non-connected lines.
② Do not disassemble a product or adjust variable resistors.
③ Pack the product with the original shipping package, in order to avoid any damages during transportation, when returning the product to NLT for repairing and so on.
④ The LCD module by itself or integrated into end product should be packed and transported with display in the vertical position. Otherwise the display characteristics may be degraded.

11. OUTLINE DRAWINGS

11.1 FRONT VIEW

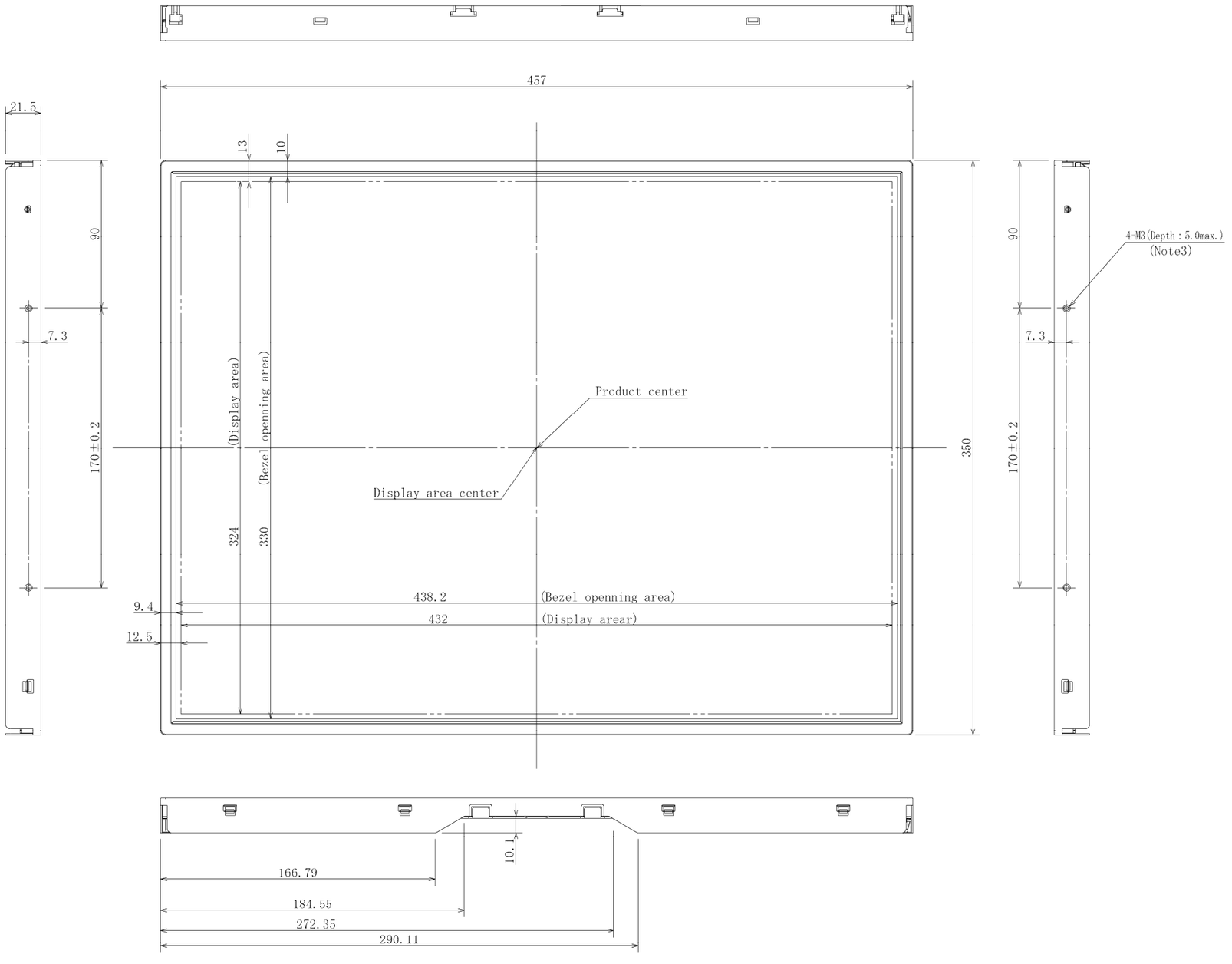

Note1: Not shown tolerances of the dimensions are ±0.5mm.
Note2: The torque for product mounting screws must never exceed 0.735N·m.
Note3: The values in parentheses are for reference.
Note4: The length of product mounting screws from surface of plate must be ≤ 5.0mm.

Unit: mm

11.2 REAR VIEW

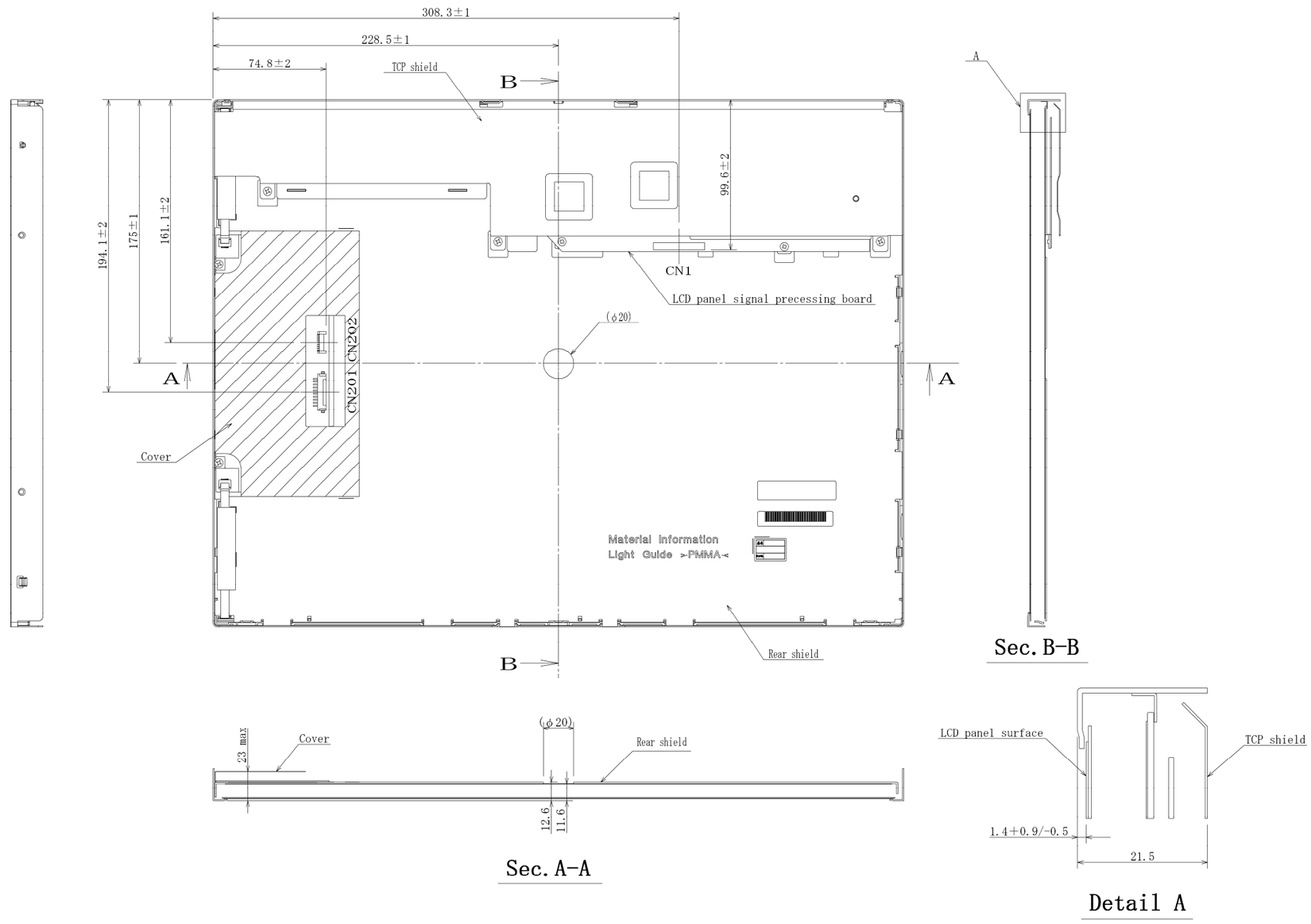

Note1: Not shown tolerances of the dimensions are ±0.5mm.
Note2: The torque for product mounting screws must never exceed 0.735N·m.
Note3: The length of product mounting screws from surface of plate must be ≤ 5.0mm.
Note4: The values in parentheses are for reference.

Unit: mm

REVISION HISTORY

The inside of latest specifications is revised to the clerical error and the major improvement of previous edition. Only a changed part such as functions, characteristic value and so on that may affect a design of customers, are described especially below.

Edition	Prepared date	Revision contents and signature	Issued date
1st edition	Mar. 15, 2013	**Revision contents** New issue **Signature of writer** *Approved by* K. Fujimoto — K. FUJIMOTO *Checked by* — *Prepared by* E. Yoshimura — E. YOSHIMURA	-